BERNSTEIN®
TOOLS FOR ELECTRONICS

SPANNFIX MAXI

# 9-225 LMT

# LIMITED EDITION

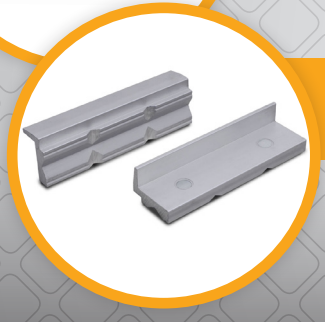

**2 PAIRS OF PROTECTIVE JAWS INCLUDED**

Our vice made of high quality aluminum gets a modern look – The **Limited Edition** with the finely structured surface in **dark grey metallic** gives to our SPANNFIX an unique appearance.

Technical data of the vice:
Table clamp for plates up to 85 mm thickness

| | |
|---|---|
| Clamping pressure | 2940 Nm |
| Clamping capacity | 100 mm |
| Clamping depth | 50 mm |
| Jaw width | 100 mm |
| Weight | 3900 g |

# SPANNFIX

## CLAMPING DEVICES WITH BALL JOINT

Excellent with the Bernstein Quality MADE IN GERMANY

### DESCRIPTION

The SPANNFIX is a multifunctional vice with a flexible head and many possible applications.

By using a high-quality ball joint, the head of the SPANNFIX can be tilted and fixed in any direction and provides optimum support in any position.

The ball movement can be adjusted individually with the aid of an adjusting screw at the lower seat of the ball. The ball is held and released with a simple lever movement.

Long life is guaranteed by the high-quality, powder-coated aluminium casting and the surface-refined steel parts!

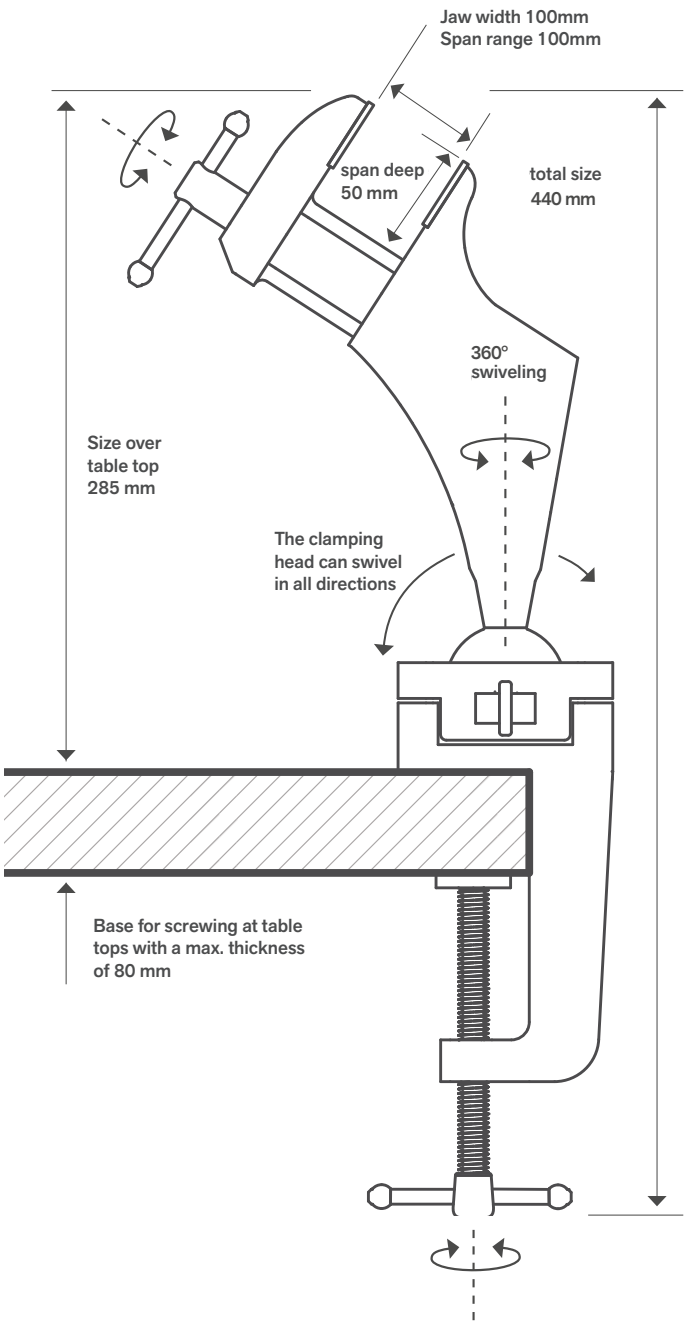


With the lever the ball joint can be fixed or loosen very fast.

A small locking screw holds the adjusting screw in position on the lower side of the vise base. When this is loosen, the ball movement can be adjusted individually.

BERNSTEIN®
TOOLS FOR ELECTRONICS

SPANNFIX MAXI

# 9-225 LMT

# LIMITED EDITION

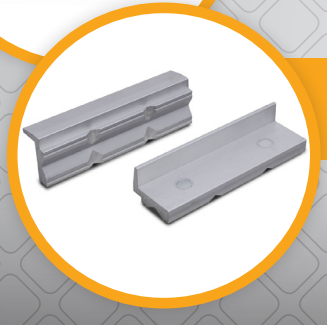

**2 PAAR SCHONBACKEN INKLUSIVE**

Unser Schraubstock aus hochwertigem Aluminiumguss erhält einen modernen Look – Die **Limited Edition** mit der feinstrukturierten Oberfläche in **dunkelgrau metallic** verleiht unserem SPANNFIX sein einzigartiges Erscheinungsbild.

Technische Daten des Schraubstocks:
Tischklemme für Platten bis 85 mm Dicke

| | |
|---|---|
| Spanndruck | 2940 Nm |
| Spannweite | 100 mm |
| Spanntiefe | 50 mm |
| Backenbreite | 100 mm |
| Gewicht | 3900 g |